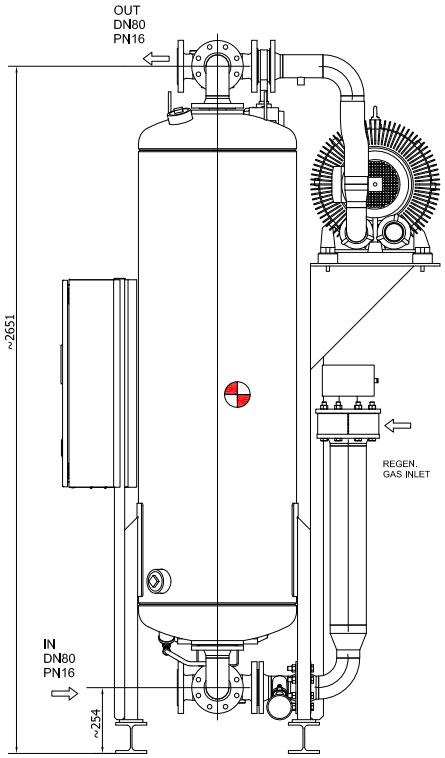

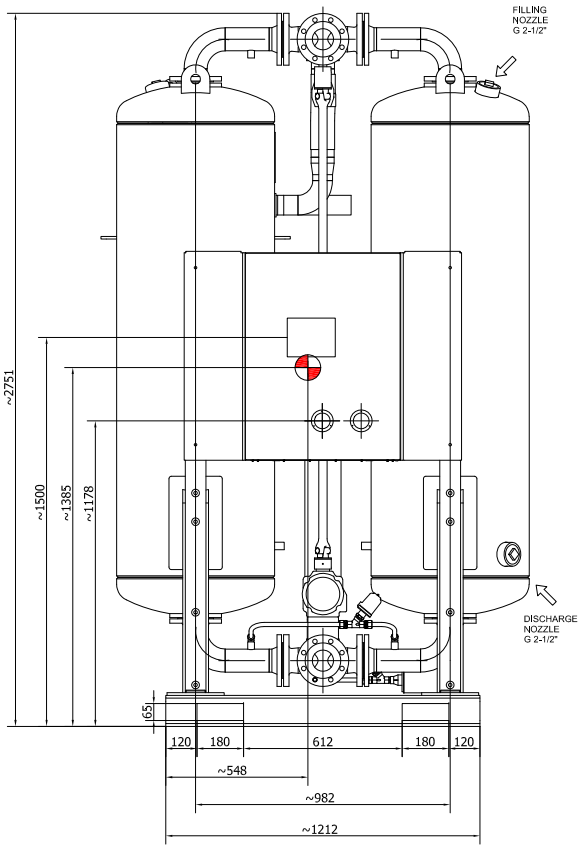

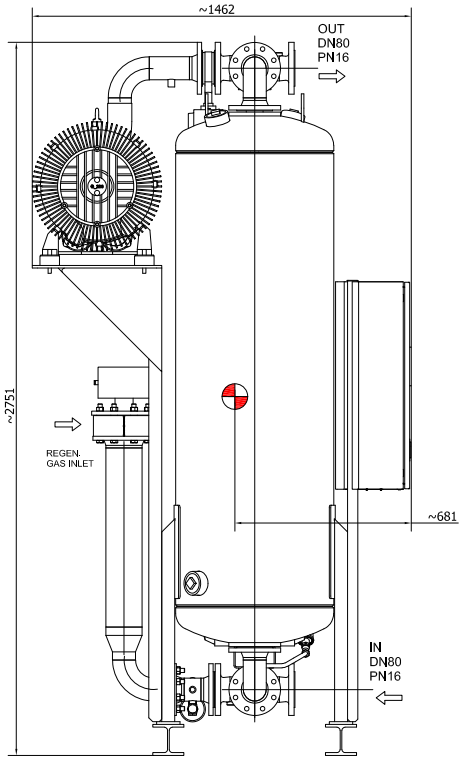

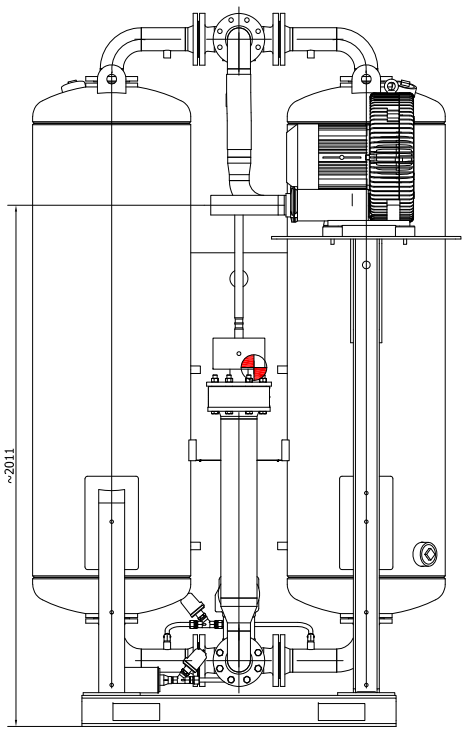

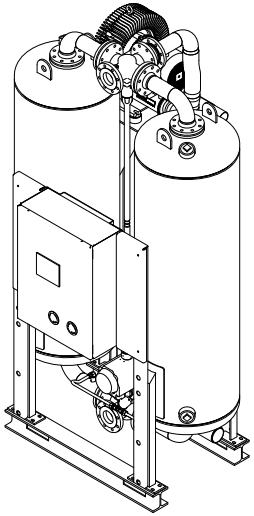

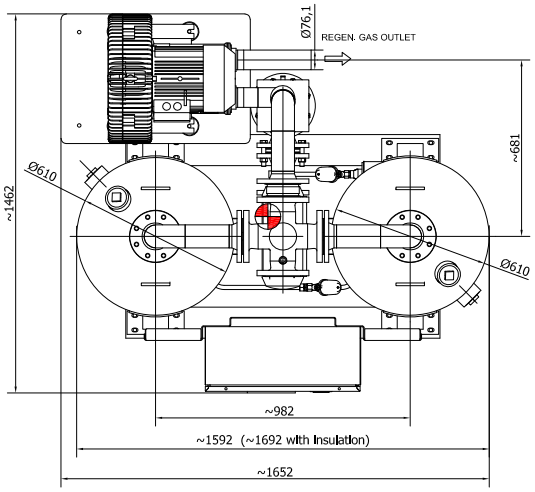

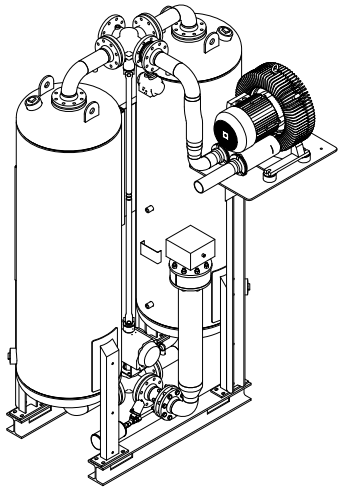

: CENTER OF GRAVITY

Parker Hannifin Manufacturing S.r.l.

Gas Separation and Filtration Division EMEA - Strada Zona Industriale, 5 - 28020 - S. Angelo di Piove (PD) - ITALY

TOLERANCE: UNI EN 22768 - mK, UNI EN ISO 13920 - AE, DIN 28005, ISO 1302	ECO: Checked/Approved by ENOVIA process	DESCRIPTION: Adsorption Dryer W210 PS 11 bar - Conn. DN80 PN16 - PDP -40°c	
	AUTHOR: MR075398	DATE: 05/02/2020	
ISO 128-30 Method 1	SCALE: 1:10	MASS: 1810 kg	DRAWING NO.: H39AC0210A001 — REV.: -
UNITS: MM	MATERIAL: -	ADE Code - Info. (Optional): W210/11VM5-F400CT	FORMAT: A1 — SHEET: 1 / 1

This drawing is the property of Parker Hannifin Manufacturing S.r.l. It must not be reproduced or copied without our written permission, and the information contained herein must not be used for any purpose other than that for which it is furnished.