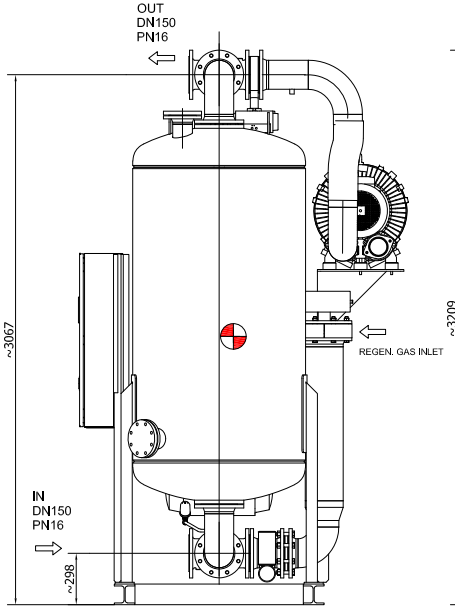

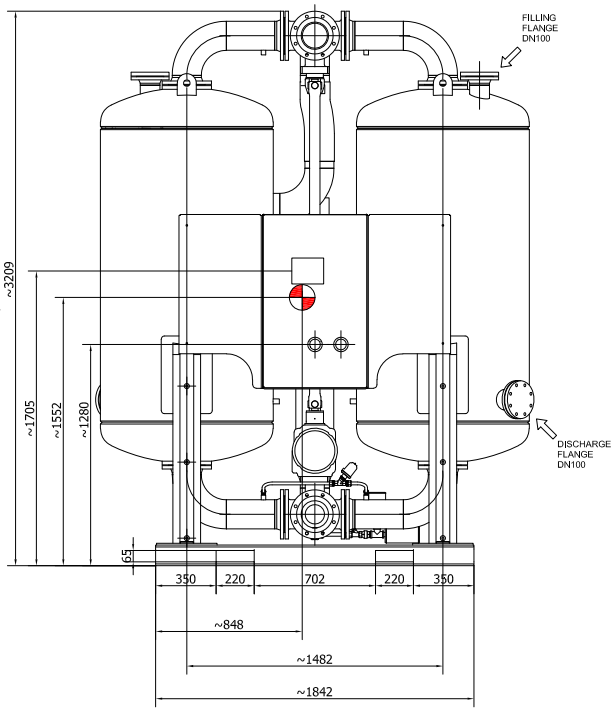

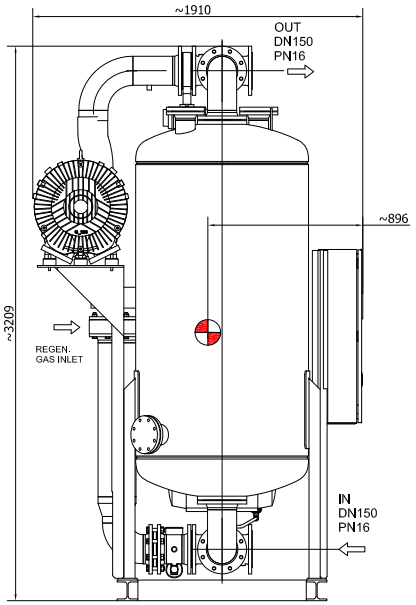

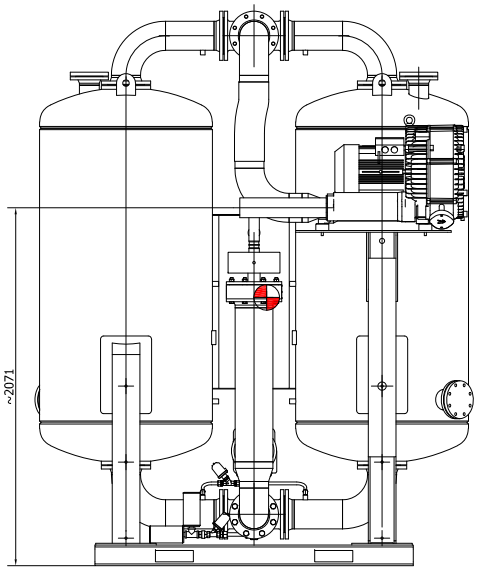

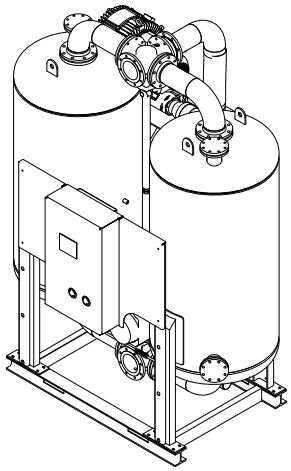

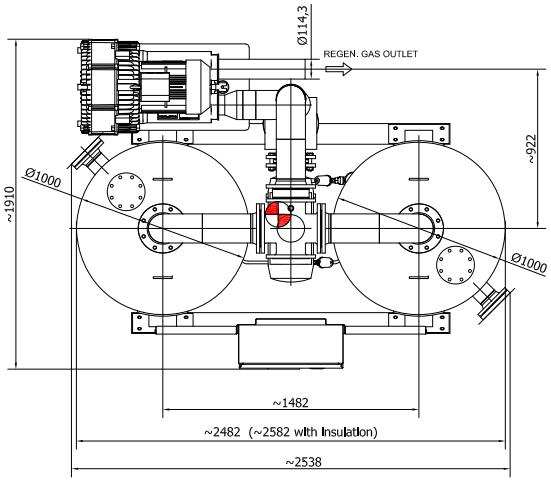

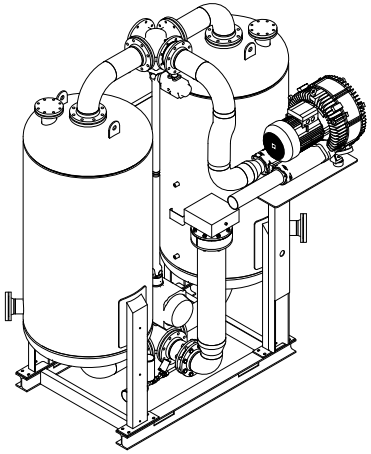

: CENTER OF GRAVITY

Parker Hannifin Manufacturing S.r.l.

Gas Separation and Filtration Division EMEA - Strada Zona Industriale, n° 38/20 - S. Angelo di Piove (PD) - ITALY

TOLERANCE: UNI EN 22768 - mK, UNI EN ISO 13920 - AE, DIN 28005, ISO 1302	ECO: Checked/Approved by ENOVIA process	DESCRIPTION: Adsorption Dryer W520 — PS 11 bar - Conn. DN150 PN16 - PDP -40°c	
ISO 128-30 Method 1	AUTHOR: MR075398	DATE: 05/02/2020	
	SCALE: 1:15	MASS: 4205 kg	DRAWING NO.: H39AC0520A001 — REV.: -
UNITS: MM	MATERIAL: -	IDE Code - Info. (Optional): W520/11VM5-F400CT	FORMAT: A1 — SHEET: 1 / 1

This document is the property of Parker Hannifin Manufacturing S.r.l. and shall not be reproduced or copied without its written permission, and it is entrusted for confidential use only.