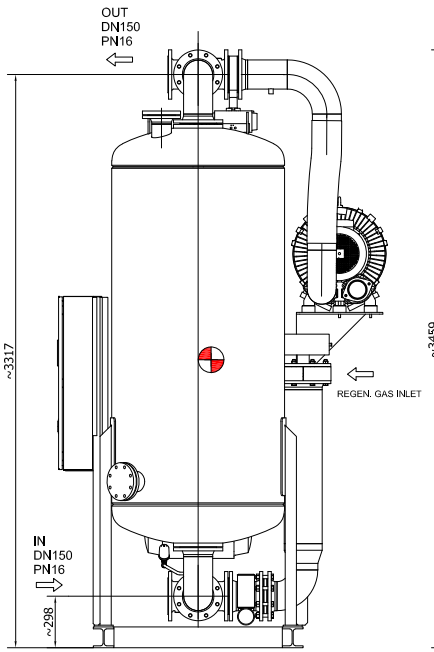

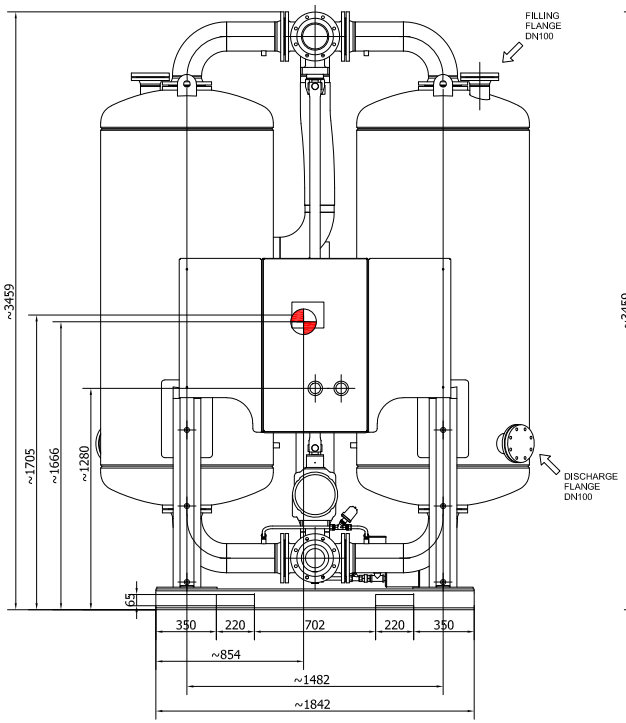

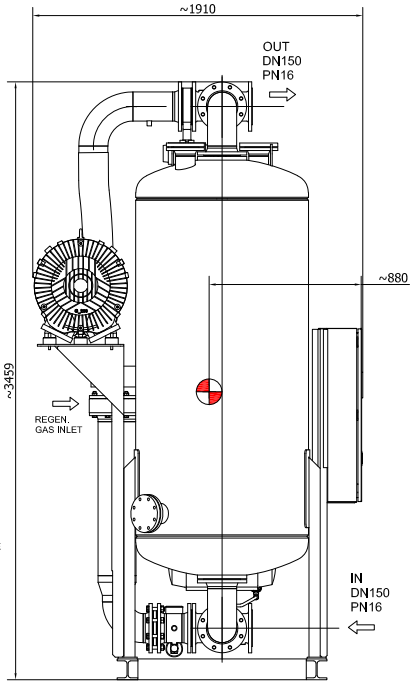

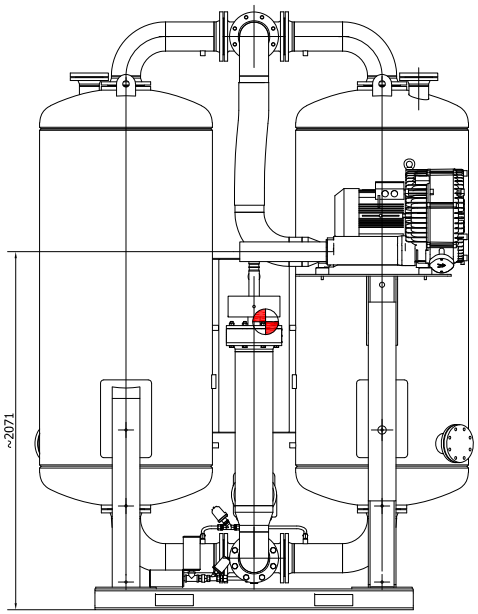

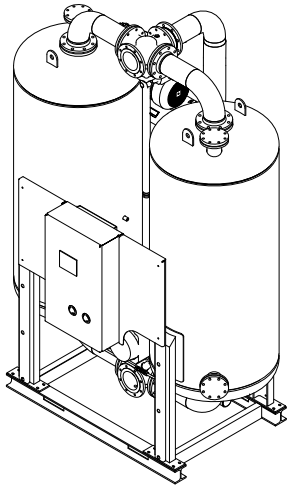

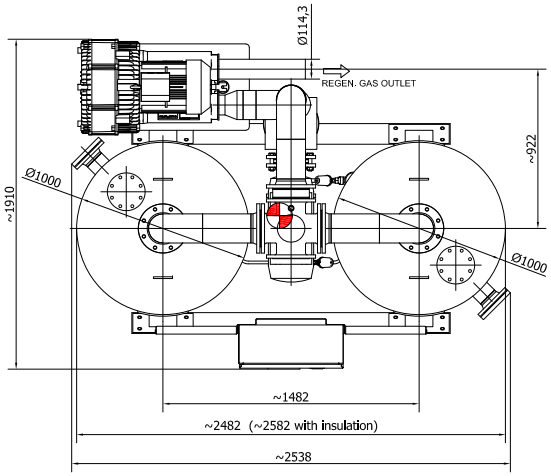

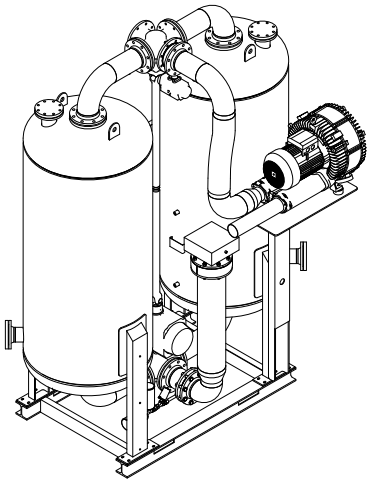

: CENTER OF GRAVITY

Parker Hannifin Manufacturing S.r.l.

Gas Separation and Filtration Division EMEA - Strada Zona Industriale, n° 38/20 - S. Angelo di Piove (PD) - ITALY

TOLERANCE: UNI EN 22768 - mK, UNI EN ISO 13920 - AE, DIN 28005, ISO 1302	ECO: Checked/Approved by ENOVIA process	DESCRIPTION: Adsorption Dryer W615 — PS 11 bar - Conn. DN150 PN16 - PDP -40°c	
	AUTHOR: MR075398	DATE: 27/01/2020	
ISO 128-30 Method 1	SCALE: 1:15	MASS: 4635 kg	DRAWING NO.: H39AC0615A001 — REV.: -
UNITS: MM	MATERIAL: -	JDE Cod. n°: (Optional) W615/11VM5-F400CT	FORMAT: A1 — SHEET: 1 / 1

This drawing is property of Parker Hannifin Manufacturing S.r.l. It cannot be reproduced or disclosed to third parties without our written consent.