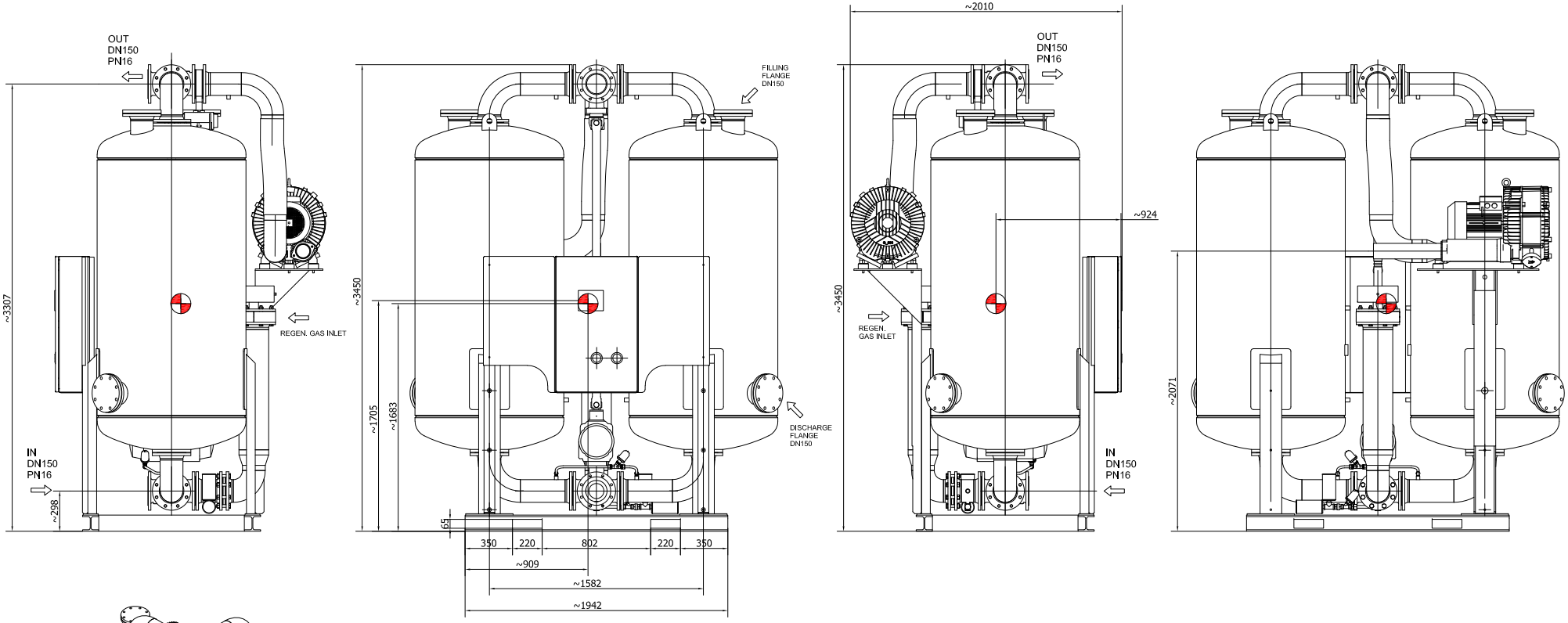

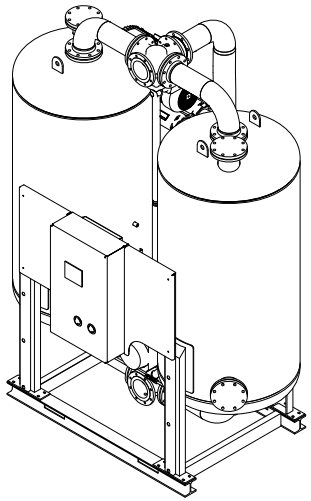

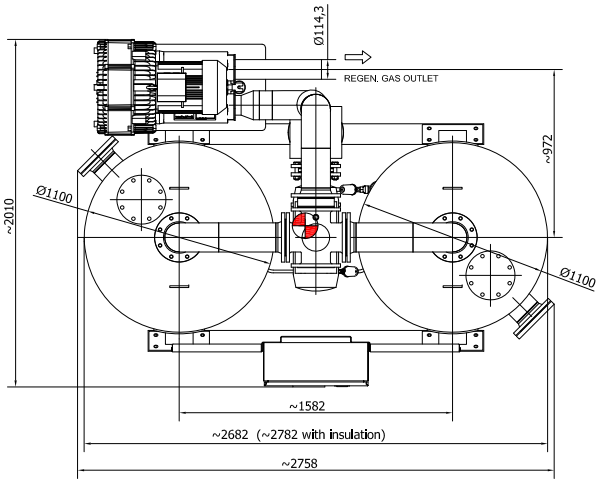

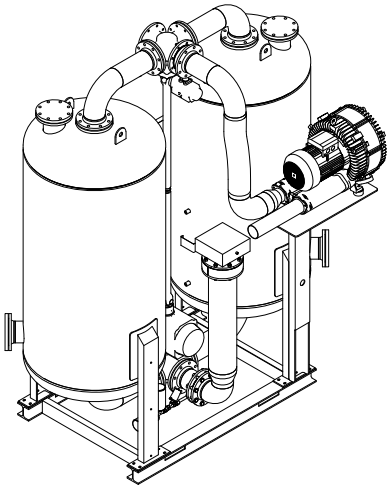

: CENTER OF GRAVITY

Parker Hannifin Manufacturing S.r.l.

Gas Separation and Filtration Division EMEA - Strada Zona Industriale, n° 38/20 - S. Angelo di Piove (PD) - ITALY

TOLERANCE: UNI EN 22768 - mK, UNI EN ISO 13920 - AE, DIN 28005, ISO 1302	ECO: Checked/Approved by ENOVIA process	DESCRIPTION: Adsorption Dryer W750 — PS 11 bar - Conn. DN150 PN16 - PDP -40°c	
ISO 128-30 Method 1	AUTHOR: MR075398	DATE: 27/01/2020	
	SCALE: 1:15	MASS: 5280 kg	DRAWING NO.: H39AC0750A001 — REV.: -
UNITS: MM	MATERIAL: -	JDE Cod. n°c (Optional): W750/11VM5-F400CT	FORMAT: A1 — SHEET: 1 / 1

This drawing is property of Parker Hannifin Manufacturing S.r.l. and contains information proprietary to Parker Hannifin Manufacturing S.r.l. and its affiliates. It is delivered on the understanding that it will not be copied or reproduced in whole or in part without the written permission of Parker Hannifin Manufacturing S.r.l. and that it will not be used for any other purpose than that for which it is intended.