BASED ON B.S.8888

DO NOT SCALE IF IN DOUBT ASK

DIMENSIONS IN MILLIMETRES

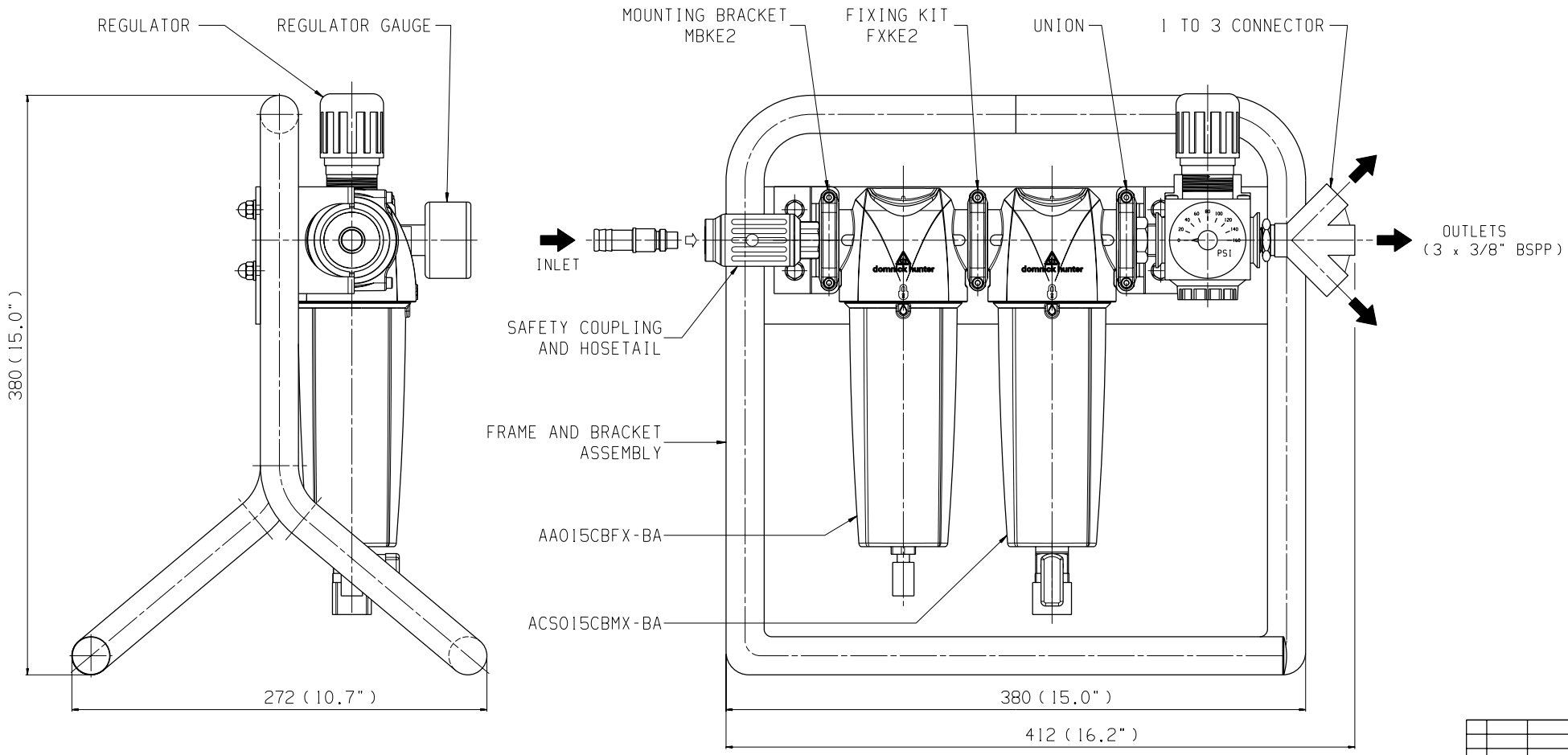

NOTE:-

ALL BAP-015 PRODUCTS ARE SUPPLIED COMPLETE WITH AN 015ACS-4 12 MONTHS SUPPORT PACK. CONSISTING OF 4 x 015ACS CARTRIDGES.

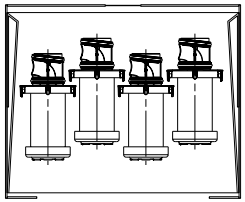

SPECIFICATION:-

FLOW RATES @ 7barg - INLET 1.2m /min (42scfm) OUTLET 1.2m /min (42scfm)
Max. Operating Pressure 10 barg (145psig)
Min. Operating Pressure 4 barg (58psig)
Max. Recommended Operating Temperature 30°C (86°F)
Min. Recommended Operating Temperature 1.5°C (35°F)

REV	DCO No.	DATE	NAME
B	003231	22Jan2013	LD
A	0027929	14Sep2012	LD
-	0009716	18Jan2011	DH

Parker
domnick hunter
Parker Hannifin Ltd
Dukesway, Team Valley,
Gateshead, Tyne & Wear
England NE11 0PZ
TEL +44 (0)191 402 9000
FAX +44 (0)191 482 6296
www.domnickhunter.com

THIS DOCUMENT IS COPYRIGHT AND IS THE PROPERTY OF PARKER HANNIFIN LTD. IT MUST NOT BE COPIED IN WHOLE OR PART, USED FOR MANUFACTURE OF, OR OTHERWISE DISCLOSED WITHOUT PRIOR WRITTEN CONSENT OF THE COMPANY
©2010 A1

MATERIAL	SCALE		DRAWN	CHECKED	APPROVED	TITLE	DRG. No	SHEET
GEN. ARRGT.	1 : .75	NAME	DH	KC	KW	BAP-015 SALES	101-10098	1 of 1
		DATE	18Jan2011	15Mar2011	15Mar2011			