	HEIGHT (H)		WIDTH (W)		DEPTH (D)		WEIGHT		a		b		c		d		e*	f		g		i		j		k		Internal Volume
MODEL	mm	ins	mm	ins	mm	ins	kg	lbs	mm	ins	mm	ins	mm	ins	mm	ins	NPT / BSPP	mm	ins	mm	ins	mm	ins	mm	ins	mm	ins	LTRS
PX010A	180.0	7.09	76.0	2.99	65.0	2.56	0.81	1.78	210.0	8.27	218.0	8.59	42.0	1.65	6.50	0.26	1/4"	30.0	1.18	30.0	1.18	38.0	1.50	50.0	1.97	154.0	6.06	0.265
PX010B	180.0	7.09	76.0	2.99	65.0	2.56	0.81	1.78	210.0	8.27	218.0	8.59	42.0	1.65	6.50	0.26	3/8"	30.0	1.18	30.0	1.18	38.0	1.50	50.0	1.97	154.0	6.06	0.265
PX010C	180.0	7.09	76.0	2.99	65.0	2.56	0.81	1.78	210.0	8.27	218.0	8.59	42.0	1.65	6.50	0.26	1/2"	30.0	1.18	30.0	1.18	38.0	1.50	50.0	1.97	154.0	6.06	0.265
PX015B	238.0	9.37	89.0	3.50	84.0	3.31	1.41	3.10	268.0	10.55	276.0	10.87	62.0	2.44	9.00	0.35	3/8"	44.0	1.73	30.0	1.18	38.0	1.50	50.0	1.97	202.0	7.95	0.620
PX015C	238.0	9.37	89.0	3.50	84.0	3.31	1.41	3.10	268.0	10.55	276.0	10.87	62.0	2.44	9.00	0.35	1/2"	44.0	1.73	30.0	1.18	38.0	1.50	50.0	1.97	202.0	7.95	0.620
PX020C	238.0	9.37	89.0	3.50	84.0	3.31	1.41	3.10	268.0	10.55	276.0	10.87	62.0	2.44	9.00	0.35	1/2"	44.0	1.73	30.0	1.18	38.0	1.50	50.0	1.97	202.0	7.95	0.620
PX020D	238.0	9.37	89.0	3.50	84.0	3.31	1.41	3.10	268.0	10.55	276.0	10.87	62.0	2.44	9.00	0.35	3/4"	44.0	1.73	30.0	1.18	38.0	1.50	50.0	1.97	202.0	7.95	0.620
PX025D	277.0	10.91	120.0	4.72	115.0	4.53	2.66	5.86	307.0	12.09	315.0	12.41	86.0	3.39	13.00	0.51	3/4"	60.0	2.36	30.0	1.18	38.0	1.50	70.0	2.76	232.0	9.13	1.548
PX025E	277.0	10.91	120.0	4.72	115.0	4.53	2.66	5.86	307.0	12.09	315.0	12.41	86.0	3.39	13.00	0.51	1"	60.0	2.36	30.0	1.18	38.0	1.50	70.0	2.76	232.0	9.13	1.548
PX030E	367.0	14.45	120.0	4.72	115.0	4.53	3.01	6.63	397.0	15.63	405.0	15.95	86.0	3.39	13.00	0.51	1"	60.0	2.36	30.0	1.18	38.0	1.50	70.0	2.76	322.0	12.68	1.857
PX030G	367.0	14.45	120.0	4.72	115.0	4.53	3.01	6.63	397.0	15.63	405.0	15.95	86.0	3.39	13.00	0.51	1 1/2"	60.0	2.36	30.0	1.18	38.0	1.50	70.0	2.76	322.0	12.68	1.857
PX035G	440.0	17.32	164.0	6.46	157.0	6.18	6.87	15.14	470.0	18.50	478.0	18.82	121.0	4.76	13.00	0.51	1 1/2"	92.0	3.62	30.0	1.18	38.0	1.50	100.0	3.94	383.0	15.07	4.4
PX040H	532.0	20.94	164.0	6.46	157.0	6.18	7.18	15.82	562.0	22.12	570.0	22.44	121.0	4.76	13.00	0.51	2"	92.0	3.62	30.0	1.18	38.0	1.50	100.0	3.94	475.0	18.70	5.35
PX045H	532.0	20.94	164.0	6.46	157.0	6.18	7.18	15.82	562.0	22.12	570.0	22.44	121.0	4.76	13.00	0.51	2"	92.0	3.62	30.0	1.18	38.0	1.50	100.0	3.94	475.0	18.70	5.35
PX045I	532.0	20.94	164.0	6.46	157.0	6.18	7.18	15.82	562.0	22.12	570.0	22.44	121.0	4.76	13.00	0.51	2 1/2"	92.0	3.62	30.0	1.18	38.0	1.50	100.0	3.94	475.0	18.70	5.35
PX050I	654.0	25.75	192.0	7.56	183.0	7.20	10.18	22.43	686.0	27.00	692.0	27.25	140.0	5.51	13.00	0.51	2 1/2"	103.0	4.06	32.0	1.25	38.0	1.50	120.0	4.72	582.0	22.91	11.0
PX055I	844.0	33.23	192.0	7.56	183.0	7.20	15.78	34.78	876.0	34.48	882.0	34.73	140.0	5.51	13.00	0.51	2 1/2"	103.0	4.06	32.0	1.25	38.0	1.50	120.0	4.72	772.0	30.39	14.0
PX055J	844.0	33.23	192.0	7.56	183.0	7.20	15.78	34.78	876.0	34.48	882.0	34.73	140.0	5.51	13.00	0.51	3"	103.0	4.06	32.0	1.25	38.0	1.50	120.0	4.72	772.0	30.39	14.0

*THREADED CONNECTION 'e' CAN BE EITHER BSPP OR NPT

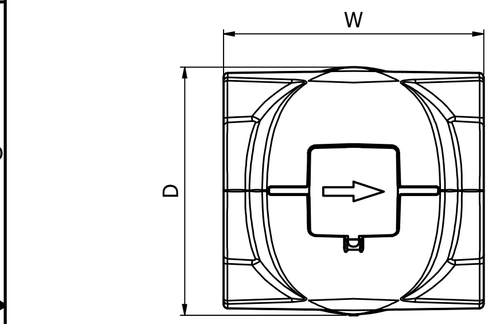

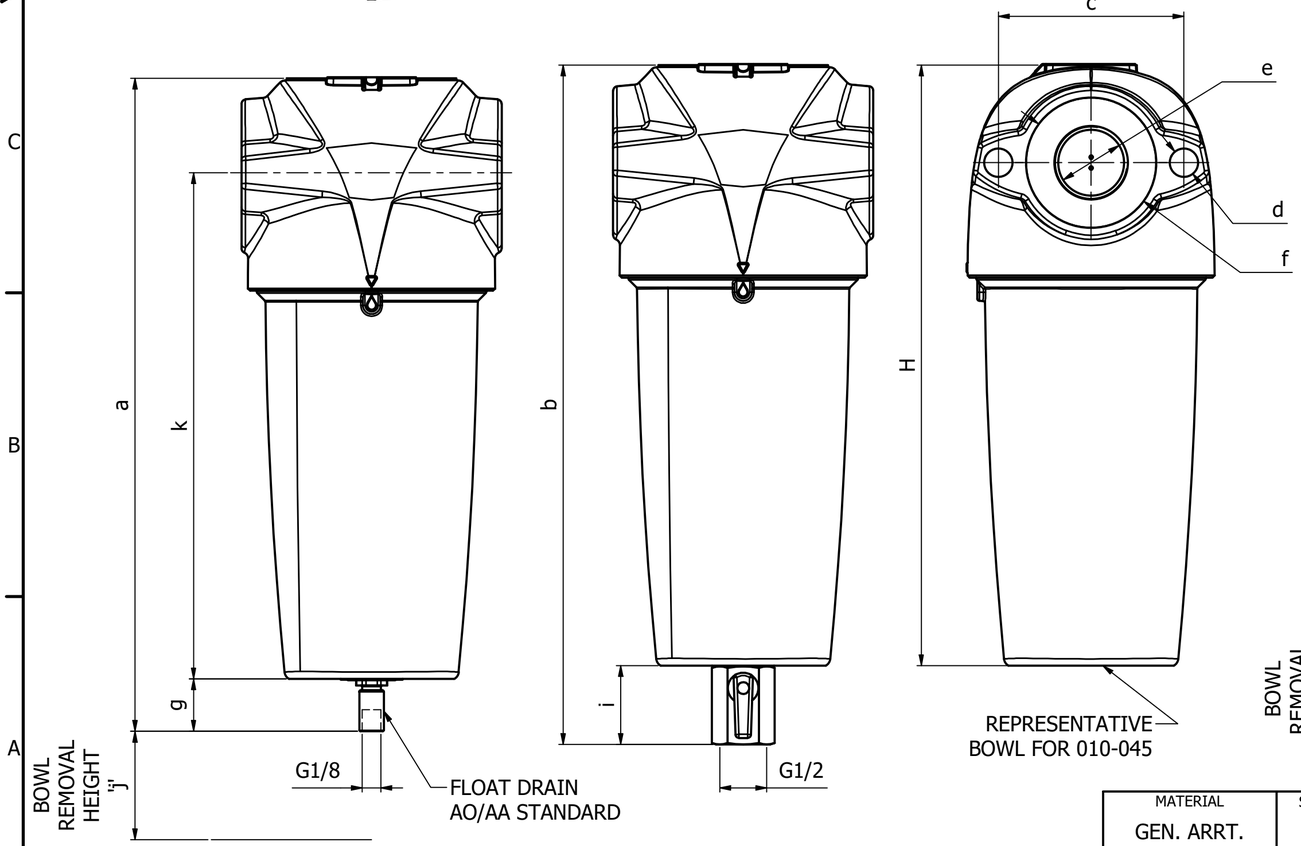

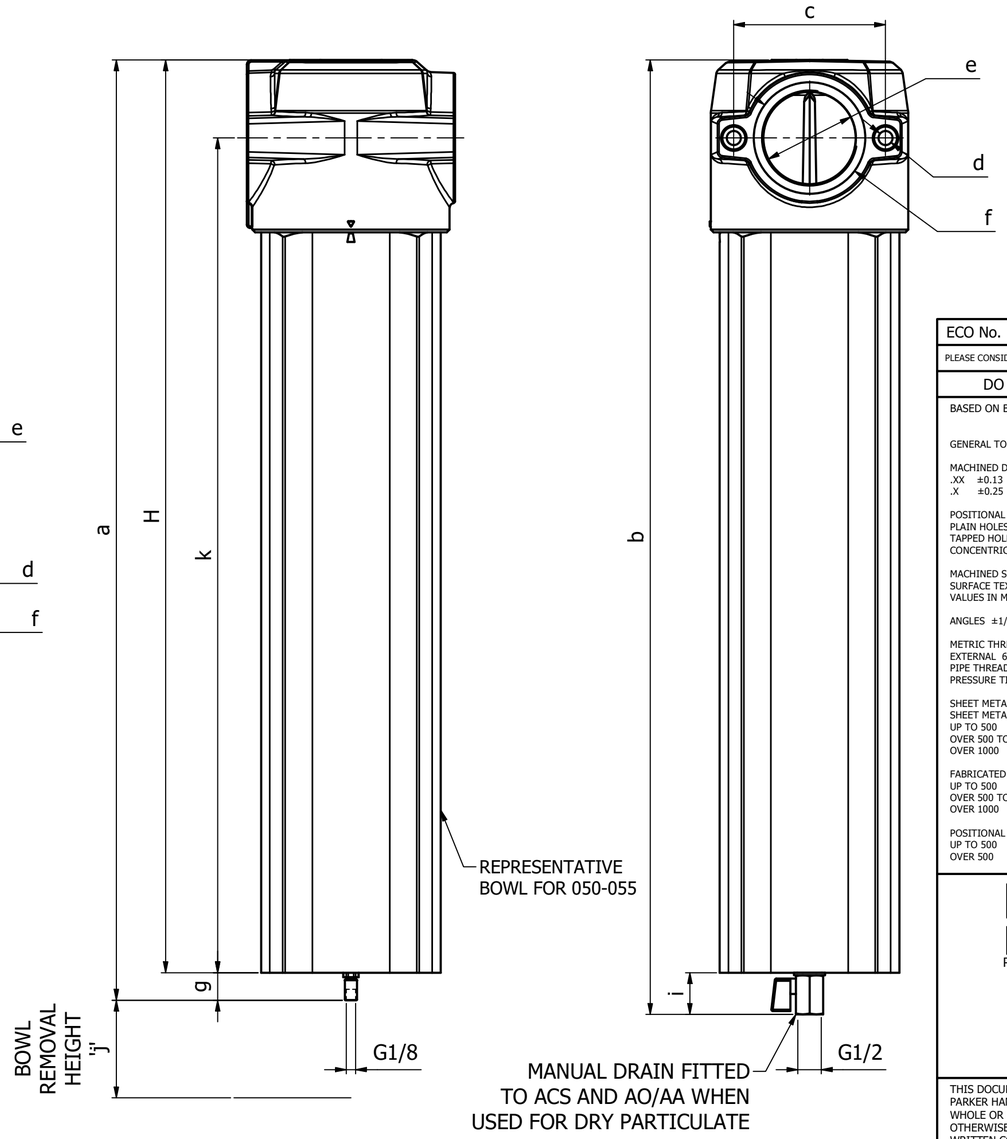

ECO No. 0366404 | REV B

PLEASE CONSIDER THE ENVIRONMENT PRIOR TO PRINTING THIS DRAWING

DO NOT SCALE - IF IN DOUBT ASK

BASED ON BS 8888 DIMENSIONS IN MILLIMETRES

GENERAL TOLERANCES UNLESS OTHERWISE STATED

MACHINED DIMENSIONS
.XX ±0.13 UP TO 300 ±0.3
.X ±0.25 OVER 300 TO 600 ±0.5

POSITIONAL TOLERANCE
PLAIN HOLES Ø0.13
TAPPED HOLES Ø0.26
CONCENTRICITY TOLERANCE 0.13 TIR

MACHINED SURFACES INDICATED THUS
SURFACE TEXTURE TO BS 1134
VALUES IN MICROMETRES

ANGLES ±1/2º (EXCEPT CHAMFERS)

METRIC THREADS TO BS 3643 MED. CLASS
EXTERNAL 6g INTERNAL 6H
PIPE THREADS
PRESSURE TIGHT TO BS 21

SHEET METALWORK & FABRICATIONS
SHEET METALWORK DIMENSIONS
UP TO 500 ±0.5
OVER 500 TO 1000 ±1.0
OVER 1000 ±1.5

FABRICATED PARTS DIMENSIONS
UP TO 500 ±2
OVER 500 TO 1000 ±4
OVER 1000 ±6

POSITIONAL TOLERANCE FOR PLAIN & TAPPED HOLES
UP TO 500 Ø1.0
OVER 500 Ø2.0

Parker Hannifin Manufacturing Ltd
Filtration & Separation Division
Dukesway, Team Valley
Gateshead, Tyne & Wear
England, NE11 0PZ
TEL +44 (0)191 402 9000
FAX +44 (0)191 482 6296
www.parker.com/dhfns

THIS DOCUMENT IS COPYRIGHT AND IS THE PROPERTY OF PARKER HANNIFIN LTD. IT MUST NOT BE COPIED IN WHOLE OR PART, USED FOR MANUFACTURE OF, OR OTHERWISE DISCLOSED WITHOUT PRIOR WRITTEN CONSENT OF THE COMPANY

© 2021 A2

MATERIAL	SCALE			DRAWN	CHECKED	APPROVED	TITLE	DRG No.	SHEET
GEN. ARRT.	1:2		NAME	DTR	MG	KW	AO/AA/ACS PX010-055 DIMENSIONS	101-10773	1 /1
			DATE	07/04/2021	19/04/2021	19/04/2021			

Model No. 101-10773.iam